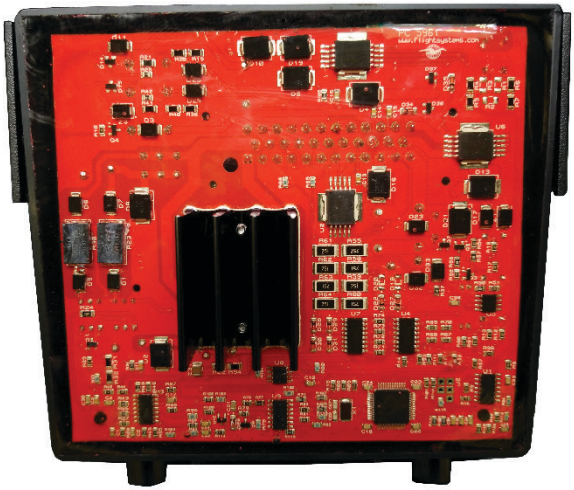

FLIGHT SYSTEMS, INC

56-5961-00

User's Manual

Table of Contents

2 | Overview and Features

| Unpacking and Inspection

3 | Removal and Installation

4 | Voltage Adjust

| Factory Default

5 | Troubleshooting

6 | Fault Codes

9 | Warranty Information

Back | Repair and Technical Support

Overview and Features

- Exact replacement for Onan© 300-5961 and 327-1501 control modules
- Improved circuit design over OEM
- Over-sized heatsink for cooler operation
- Encapsulated in automotive grade urethane and fully repairable
- Contains fault code system for easy troubleshooting
- Advanced detection system checks condition of brushes, slip rings, and rotor while cranking. Generator will be prevented from running if damage is likely.
- Communication port for connection to Flight Systems 327v2 modem. Allows for remote monitoring and remote start, (may not be available upon initial release).

This controller, as with all Flight System built devices, comes with a 2-year warranty and a 30-day return policy upon initial purchase of the product.

Unpacking and Inspection

Be careful when unpacking your new controller so that nothing is damaged. Do not expose your controller to static shock prior to or following installation.

Removal and Installation

The controller is accessible through the generator's front access door. The housing for the controller is located in the air intake housing. You may need to unbolt the coolant reservoir to access the control board location. You should not need to disconnect any coolant lines.

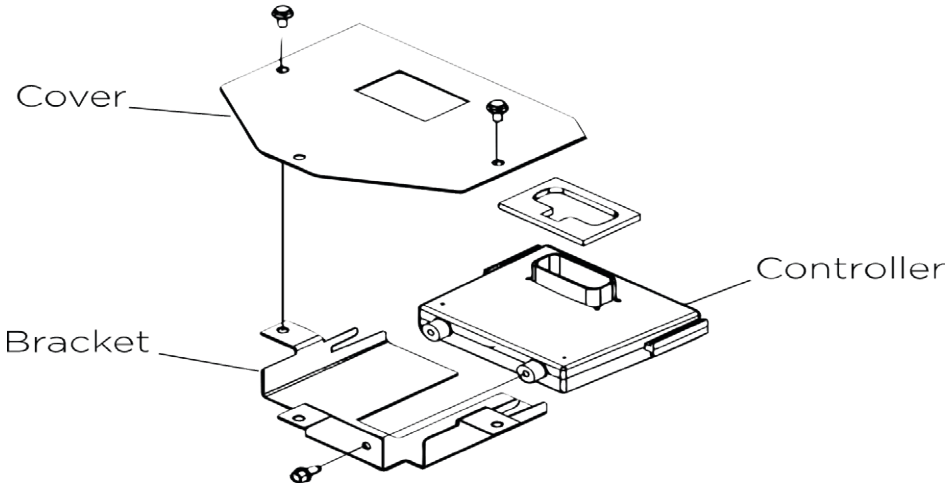

- Start by disconnecting the connector cable on the old control board.
- Next, remove the three 10mm hex bolts on the cover of the housing. Once the cover has been removed, the controller and bracket can be lifted from the intake housing.
- Unbolt the single 10mm hex bolt threaded into the plastic mount of the old controller.
- Installation is reverse of removal. Make sure wire connector latches properly into control board mating connector.

AFTER THREADING INTO A PLASTIC MOUNT ON THE CONTROLLER, IT IS CONSIDERED INSTALLED, VOIDING THE 30-DAY RETURN POLICY!

Voltage Adjust (within 20 seconds after startup)

Due to variations in part tolerances and voltage sensing transformer ratios, a voltage adjustment mode is provided. Under most circumstances, the output voltage should be adjusted to 120v, no load, measured from a circuit breaker (hot) to chassis ground.

- Press start 6 times; the status light will begin blinking to signal that the controller is now in voltage adjust mode.
- Short press the start button to increase voltage by half a volt.
- Long press (more than 2 seconds) the start button to decrease voltage by half a volt.

Wait for the status light to stop flashing. If the generator shuts down before status light stops flashing, the voltage setting will not be saved.

If the generator needs to be shut down during this operation, hold stop for two seconds.

Factory Default

To restore all calibrations to factory default:

- Press the stop button ten times while generator is not running and not in a fault condition. The status indicator will come on solid.
- Hold stop button until status indicator turns off.

Troubleshooting

Blinking while Cranking
Causes: normal operation, no issue.

Solid Light while Cranking **NEW FEATURE**
Causes: open field or high resistance, check slip rings and brushes for continuity.

NOTE: Cranking will continue, attempting to clean the slip rings by friction. Fuel is disabled until field resistance returns to safe range.

No Response at Control Switch
Causes: faulty switch, poor connections, missing connections, or dead battery

Starter Engages and Disengages
Causes: low cranking voltage

Starting Batteries Don't Maintain a Charge
Causes: marginal battery, poor battery connections, or faulty charging system

No AC Power While Generator is Running
Causes: a circuit breaker is off, tripped or malfunctioning, or poor AC connections at controller harness or circuit breaker

Engine Surging Without Fault Shutdown
Causes: fuel leaks, restrictions or air bubbles, worn slip rings/ brushes, misadjusted or faulty governor, worn generator bearing

Testing the Generator's Windings

This procedure requires an ohmmeter, set on the lowest resistance scale (usually 200-ohm.) On the control board mating connector, with the generator NOT RUNNING, measure these points:

- Pin 3 to Pin 13 – Quadrature winding = 1.5-3.0 ohms.
- Pin 1 to Pin 14 – Field winding (rotor) = 20-30 ohms.
- Circuit breaker 1 (T1 wire) to Ground = .15-.30 ohms.
- Circuit breaker 2 (T4 wire) to Ground = .15-.30 ohms.

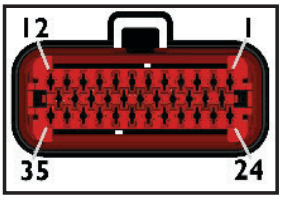

Fault Codes

At fault shutdown, the status indicator light will blink to indicate a fault code. Blinking will continue for 5 minutes and then stop. To restore blinking after timeout, press the control switch to STOP briefly, then press STOP 3 times.

No. 1 – Engine Over Temperature (Diesel Only)
While running, engine coolant temperature was above 239°F/115°C for 10 seconds.

No. 2 – Low Oil Fault
(All Except HGJBB) While running, oil pressure dropped below 14 psi for 3 seconds.
(HGJBB) Oil level switch grounded for 30 seconds; low oil level.

No. 3 – Service Fault
A two-digit second-level fault occurred.

- *Press STOP briefly to activate the two-digit code indication. The two-digit code consists of 1-5 blinks, a brief pause, and then 1-9 blinks. The first set of blinks represents the tens digit and the second set of blinks represents the units digit. For example, shutdown code No. 32 would be: blink-blink-blink-pause-blink-blink-long pause-repeat*

No. 4 – Over Crank
Cranking time exceeded 35 seconds.

Two-digit Service Faults

No. 12 – Over Voltage
After voltage regulation was enabled, output voltage was higher than 150VAC for 75 milliseconds or higher than 138VAC for 3 seconds.

No. 13 – Under Voltage
After voltage regulation was enabled, output voltage was lower than 108VAC for 5 seconds.

No. 14 – Over Frequency
Frequency was higher than 70Hz for 40 milliseconds or higher than 66Hz for 6 seconds.

No. 15 – Under Frequency
Frequency was less than 54Hz for more than 8 seconds.

No. 17 – Fuel Pump Fault
Fuel pump circuit open.

No. 19 – Actuator Shorted or Open (EFI/Diesel Only)
Before cranking, the controller sensed an open or shorted governor actuator or wiring.

No. 22 – Actuator Overload (EFI/Diesel Only)
Due to overloaded AC output or poor engine performance, the controller kept the governor actuator at full-duty cycle for 60 consecutive seconds.

No. 24 – Faulty Engine Temperature Sender (Diesel Only)
After 10 minutes of running, the controller sensed an open temperature sender or wiring.

No. 27 – VAC Sense Lost
While running, the controller lost stator AC sensing voltage even though the field was functioning normally.

No. 29 – High Battery Voltage
Before cranking, the controller sensed that incoming battery voltage was greater than 19.2 volts for 5 milliseconds, or greater than 19.2 volts for 1 second, while running.

No. 31 – Overspeed Fault (Carb/EFI Only)
Engine RPM greater than safe operating speed.

No. 32 – Starting Fault
The controller could not suitable detect cranking speed for 12 seconds. Possible open quadrature winding or broken brushes/ dirty slip rings.

No. 33 – Not a valid code
The controller is blinking 3 to indicate a service fault. Follow instructions for No. 3 - Service Fault.

No. 35 – EEPROM Memory Checksum Fault
During power on, the controller detected corrupted EEPROM memory.

No. 36 – Mechanical Fault
While running, engine speed fell to less than 500 RPM for .5 seconds, uncommanded by controller. This code can come up when genset runs out of fuel.

No. 37 – Invalid Set Configuration (Carb/EFI Only)
Ratio of AC Frequency to ignition speed is not correct. Slipping belt or broken engine coupling are the most frequent causes.

No. 38 – Field Overload
While running, field voltage higher than 150VAC for 10 seconds.

No. 41 – Generator Rotor Short
During cranking, the controller sensed that the field circuit/rotor was shorted to ground.

No. 42 – ROM Fault
During power on, the controller detected a ROM error.

No. 43 – RAM Fault
During power on, the controller detected a RAM error.

No. 45 – Speed Sense Lost
The controller lost speed sense for .25 seconds.

No. 47 – Ignition Fault (Carb/EFI Only)
Ignition pulses from a magneto not detected for 1 second.

No. 48 – Loss of Field Sense
While running, the field sense circuit on the controller failed, or field voltage dropped to zero.

No. 51 – Processor Fault
CRC verification failed on power up.

No. 52 – Fuel Injector Fault (EFI Only)
Open or shorted fuel injector.

No. 53 – MAT Sensor Fault (EFI Only)
MAT resistance greater than 300K ohms.

No. 56 – MAP Sensor Fault (EFI Only)
MAP sensor less than 50kPa while cranking.

No. 57 – Over Prime
The local or remote switch was held in the prime/stop position for more than 3 minutes.

No. 58 – Exhaust Gas Temperature Fault (EFI Only)
EGT greater than 1200F for 2 seconds.

No. 81 – Exhaust Gas Temperature Sensor Open (EFI Only)
EGT below 140F for 2 minutes (or after 2 minutes from starting).

No. 82 – Exhaust Gas Temperature Sensor Shorted (EFI Only)
EGT is detected at 1832F for 1 second. Unit will not crank.

Warranty Information

This Flight Systems manufactured replacement controller is warranted to be free from defects in materials and workmanship for a period of two years from the date it was sold.

Flight Systems Limited Warranty covers the repair or replacement of defective products within the warranty period. It does not cover the cost of installation, removal costs incurred, or possible damage to other equipment (including the generator or parts thereof) as a result of this product.

Flight Systems (or its authorized agent) shall reserve the right to determine the cause of malfunction. If we determine that it was due to abuse, misuse, improper installation, acts of nature (such as storm), failure to perform recommended genset maintenance procedures, or problems elsewhere in the genset, the warranty claim shall be dissolved and established standard repair rates apply.

Flight Systems 30-Day Return Policy is only valid for 30 days after initial purchase of any Flight Systems product. Installation of any products will result in termination of the 30-Day Return Policy on that product. Refund/Credit issued shall be less a 25% per item restocking and testing fee as long as the product is in new undamaged condition. Shipping charges are non-refundable.

Repair and Technical Support

If this product suffers a failure when out of warranty it can be rebuilt. Applicable Flight Systems repairs are issued a one-year warranty.

Please fill out and print our Repair Shipping Form located at www.flightsystems.com and include it with any repairs. Repairs can be shipped to:

Flight Systems
207 Hempt Road
Mechanicsburg, PA 17050

Any repairs not sent with proper contact information will be held for no more than 6 months from the date received before being recycled by Flight Systems.

Technical support is also available by phone or email for all Flight Systems products:

Phone: 717-590-7330
Email: techs@flightsystems.com
Open Monday-Friday, 8am-5pm Eastern